FOXCONN®

SPECIFICATIONS

PCI-E Connector

SIOM Press fit Vertical Type
1.00mm [.039”] Pitch
36 Pos.

Mechanical

Contact Retention Force: *4.9N min. per pin*
Durability: *50 Cycles*
Insertion Force(Per Contact pair): 1.15N max *per contact pair*
Removal Force(Per Contact pair): 0.15N min *per contact pair.*
Tail Insertion Force: 44.1 N MAX***.***

Electrical

Current Rating: *1.1A min per pin, 30℃ above ambient*
Insulation Resistance: *1000MΩ min. at 500V DC*
Dielectric Withstanding Voltage: *500V AC min at Sea Level*
Contact Resistance: *30mΩ max. initial,. 50mΩ max. after test*

Physical

Housing: *Thermoplastic; UL 94V-0; Color: Black*
Contact: COPPER ALLOY
Operating Temperature: *-40℃ to +105℃*

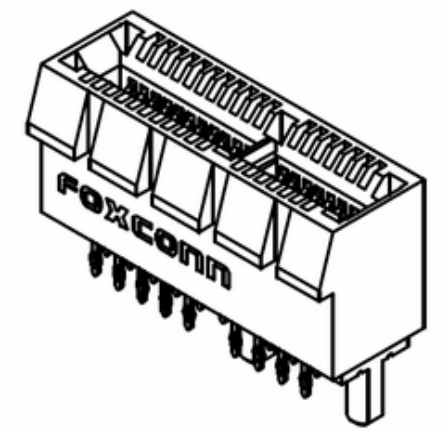

DRAWING

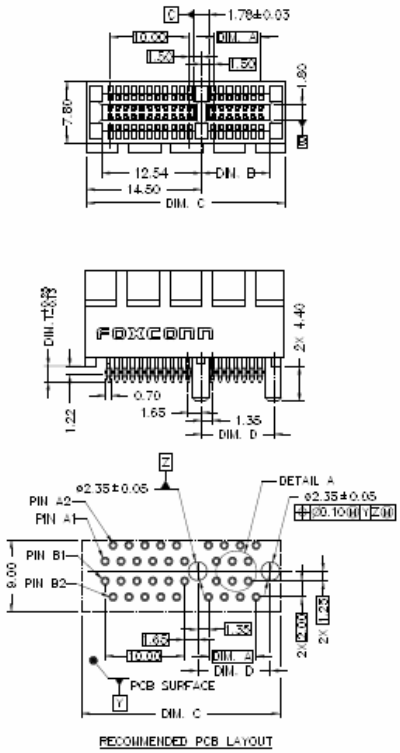

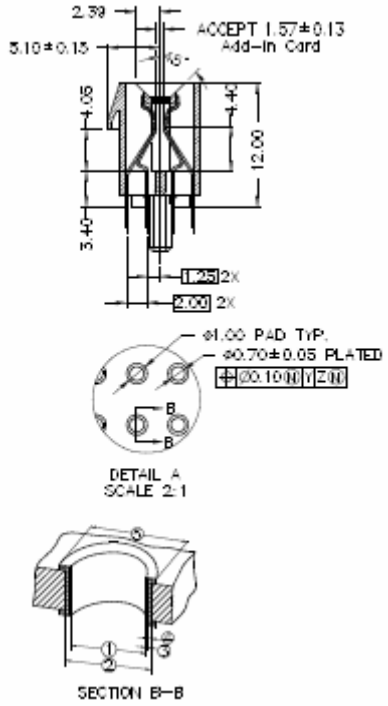

ORDERING INFORMATION

PROD. NO.: 2EG * ** * * – D2DS – * *

- FIELD PRODUCT SERIES: 2EG= PCI EXPRESS
- TERMINAL TYPE: 9= VERTICAL PRESSFIT TYPE
- NO. OF POS.: 18= 36 POSITIONS; 32= 64 POSITIONS; 49= 98 POSITIONS; 82= 164 POSITIONS
- TAIL LENGTH: 1= 2.00mm; 2= 3.43mm
- CONTACT AREA GOLD PLATING: 1= GOLD FLASH; 7= 15u” GOLD; 3= 30u” GOLD
- EXTENSION CODE
- PLATING TYPE: DF: LEAD FREE

2	CONTACT	SEE TABLE	COPPY ALLOY	50u” NICKEL PLATING OVERALL UNDERPLATED. 100u” TIN OR TIN LEAD PLATING OVER NICKEL AT TAIL. GOLD PLATING ON CONTACT AREA.
1	HOUSING	1	THERMOPLASTIC UL 94V-0	MOLDED BLACK
ITEM	DESCRIPTION	Q'TY	MATERIAL	TREATMENT

PART NUMBER	RECOMMENDED PCB THICKNESS	DIM.T
2EG9**2*–***S–**	3.18±0.23mm	3.43
2EG9**1*–***S–**	2.36±0.18mm	2.00

PART NUMBER	DIM. A	DIM. B	DIM. C	DIM. D
2EG982**–***S–**	70.00	72.54	89.00	73.15
2EG949**–***S–**	37.00	39.54	56.00	40.15
2EG932**–***S–**	20.00	22.54	39.00	23.15
2EG918**–***S–**	6.00	8.54	25.00	9.15

All specification & dimensions are subject to change, please call your nearest Foxconn sales representative for update information.